Model DSP-FCI

Portable SF6 or Standard Dewpoint Analyser
Ranges available between -110°C to +20°C (-166°F to +68°F) Td.

The Model DSP-FCI is a fully self-contained portable SF6 or Standard hygrometer from Alpha Moisture Systems which will deliver the most dependable moisture measurement in industrial and laboratory applications. Designed with the operator in mind, **Model DSP-FCI** is extremely easy to use and the digital **dewSMART™** technology ensures accurate and reliable readings over long periods with little or no maintenance. The incorporation of stainless steel quick connect fittings, together with the Desiccant Drydown Chamber, allows rapid measurements which saves both time and cost.

Fully Portable - Rugged - Fast Response - Stable - Reliable - Accurate - Easy to set up.

Features

- Overall Range -110°C to +20°C Dewpoint
- Portable - Fully Self Contained
- Self-Diagnostics on Start-up
- Quick Connect SS Coupling
- Ordinary "C" Type batteries
- Sample flow control for inlet pressure up to 20 barg
- Sample flow indication
- Excess of 250 Hours of continuous operation
- Desiccant Dry-Down Chamber for rapid measurements
- Selectable engineering units in °C, °F, ppb(v), ppm(v), ppm(w), g/m³ & lb/MMSCF

The **Model DSP-FCI** also incorporates an integral flow control valve which allows for high pressure samples (up to 20barg) to be reduced to atmospheric pressure for introduction to the dessicant head assembly. In addition the built in flow indicator with sample-specific graduation, provides flow control for air, SF_6 or any other gases.

Model DSP-FCI is available in a total of eight different ranges between -110°C to +20°C dewpoint, with the display selectable in various engineering units:- °C, °F, ppm(v), ppb(v), ppm(w), g/m³ & lb/MMSCF. Parts per million (weight) can be programmed for gases other than those pre-programmed (Air, Ar, H_2, SF_6, CO_2 & N_2) by simply inputting the molecular weight of the gas under test.

Full interchangeability of the **dewSMART™ Sensor** ensures guaranteed accuracy and reliability without the need to return the whole unit back to base for calibration and setup.
The Model DSP-FCI is supplied ready for use with batteries installed, calibration certificate traceable to National and International Humidity standards, two metres of stainless steel braided PTFE sampling hose, instruction manual and an optional robust transit case or carry bag.

Specifications

SENSOR TYPE
Aluminium Oxide Ultra High Capacitance Digital Sensor
RANGE
Six different ranges encompassing an overall range of -110°C to +20°C dewpoint (-166 to +68°F). Corresponding ranges in ppm(v), ppb(v), ppm(w), g/m5 & lb/MMSCF. Parts per million (weight) programmable for different gases.
OPERATING PRESSURE
Input pressure to flow meter: 20 bar maximum
Input pressure to Dessicant Head Assembly: 0.5 barg maximum
NOTE: The sample pressure must be reduced to 0.5 barg maximum by the integral flow control valve, before it is allowed into the Dessicant Head Assembly. The Dessicant Head Assembly is only designed to operate at 0.5 barg maximum pressure.
DISPLAY
Industrial specification, 2 x 20 Character LCD with programmable bright & dark contrast.
DISPLAY RESOLUTION
0.1°C dewpoint / 0.1ppm
POWER SUPPLY
9V DC - Six "C" type batteries.
BATTERY LIFE
In excess of 250 hours during continuous operation.
ELECTRONICS ACCURACY
Better than ± 1% of range.
WARM UP TIME
15 Seconds
SENSOR CALIBRATION ACCURACY
Better than ±2°C dewpoint. All units supplied with certificates documenting factory calibration against known moisture levels traceable to National & International humidity Standards.
REPEATABILITY
± 0.1°C dewpoint.
TYPICAL RESPONSE TIME
95% of reading within 20 seconds in normal operation.
OPERATING CONDITIONS
Temperature : -20°C to +50°C
Humidity : 0-98% RH, Non-condensing
Storage Temperature : -50°C to +70°C
ELECTRMAGNETIC COMPATIBILITY (EMC)
Complies with BS EN 61326-1
FLOW RATE TO SENSOR
2 to 20 litres/minute
CONNECTIONS
Inlet: Swagelok quick-connect stainless steel coupling.
Outlet: 0.25" overall diameter compression tube fitting.
WARRANTY
2 years from date of delivery against faulty material or workmanship.

Desiccant Dry Down Technology

The Desiccant Head Assembly

Keeping the sensor dry between tests ensures that the DSP-FCI is always ready to carry out rapid spot checks. The unique design of the Desiccant Head achieves this by surrounding the sensor with desiccant before the head is lifted for sampling.

At no time is the sensor allowed to come into contact with ambient air. The chamber is also designed so that the void space and chamber wall surfaces are purged with sample gas, before exposure of the sensor, so giving faster, more accurate and reliable results.

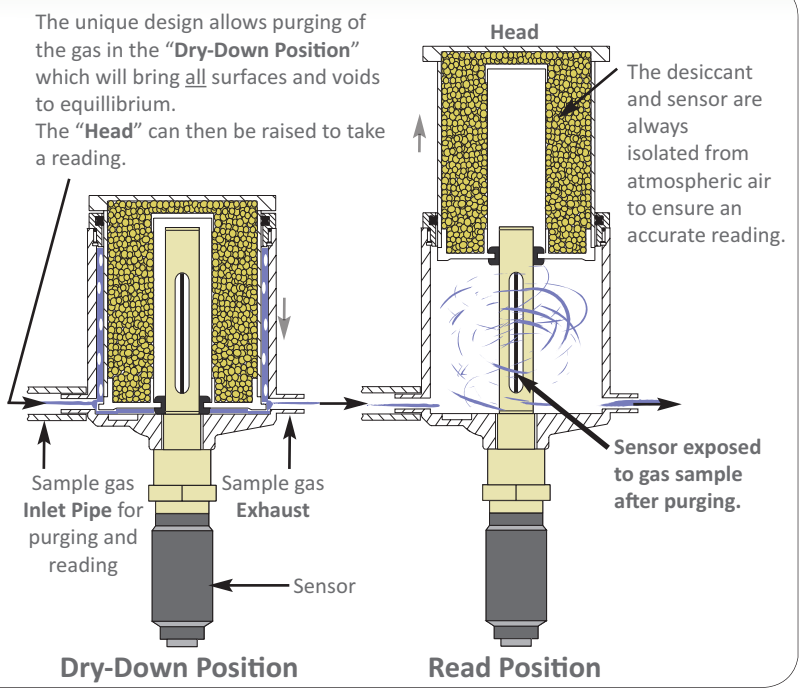

Corrosive Gases
The Sensor should not be exposed to corrosive gases (or corrosive contaminants in the gas sample) as these can chemically attack the sensor, impairing calibration accuracy and/or damaging it beyond economic repair. Examples of such gases are mercury (Hg), ammonia (NH_3), chlorine (Cl_2) etc. Strong oxidising agents such as ozone (O_3) should also be prevented from coming into contact with the sensor.

Weights and Dimensions

Model DSP-FCI Dewpoint Analyser

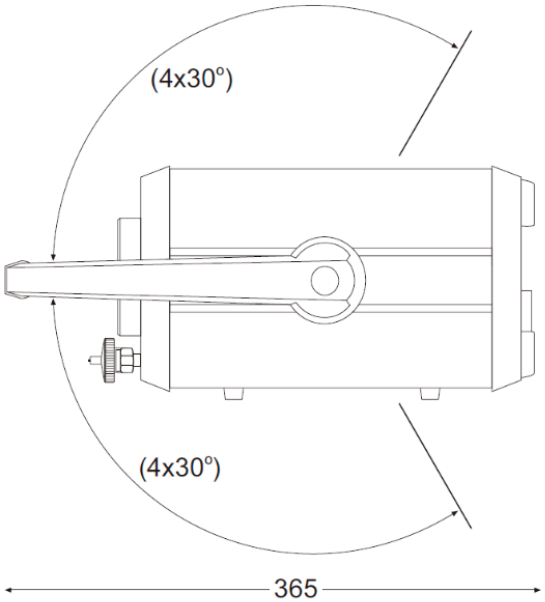

All dimensions in millimetres

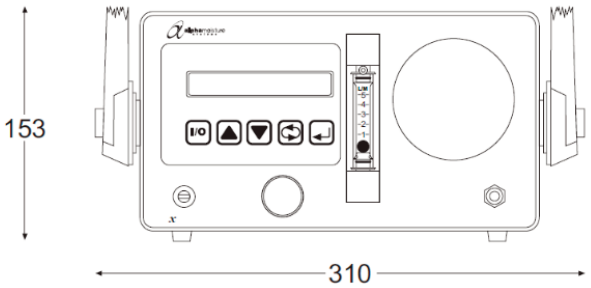

Weight unpacked - 5.8 Kg (net)

Export packed - 8.2 Kg (gross)

How to Order - Step 1 of 2

Select a Range Below

Model DSP-FCI + [XX] (Range)

PURPLE	-110 to +20°C	PL
SILVER	-110 to -20°C	SR
BLUE	-80 to +20°C	BL
GREY	-80 to 0°C	GY
RED	-80 to -20°C	RD
YELLOW	-60 to 0°C	YW
GOLD	-50 to +20°C	GD
GREEN	-30 to +20°C	GN

Example : If your requirement is for a Portable dewpoint meter with an operating range of -80°C to -0°C dewpoint then please order as : Model DSP-FCI-GY

Your DSP-FCI includes the following parts:

- 2m of high quality stainless steel braided PTFE hose with 1/8 NPT tapered fitting and female quick connector.
- Pressure calculator and instruction manual.
- Allen key.

How to Order - Step 2 of 2

Transit Case or Bag

Order DSP-FCI + [TC] (Case)

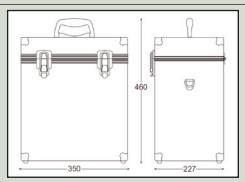

Weight unpacked (Excluding analyser) = 4Kg (net)
Export packed (Excluding analyser) = 6Kg (gross)
Export packed (Including analyser) = 12Kg (gross)

Order DSP-FCI + [BG] (Bag)

Notes

1684 Model DSP-FCI pd180222-Iss-8

Alpha Moisture Systems Limited.
Registered Office: Alpha House,
96 City Road, Bradford, BD8 8ES. UK.

CERTIFICATE No. FM35600
BS EN ISO 9001:2015

Registered in England and Wales No. 3902302
VAT Registration No. GB607207563
WEEE Producer Registration No. WEEE/EA0067TX

Tel +44 (0) 1274 733100
Email info@amsystems.co.uk
Website www.amsystems.co.uk

Product specification may be subject to change.